INDUCTANCE	WEIGHT
0.029 mH	190 Lbs.

NO.	CHANGE DESCRIPTION	BY	DATE	C'K'D

FILE: J:\ENG\PROD-DOC\RL(RL)\

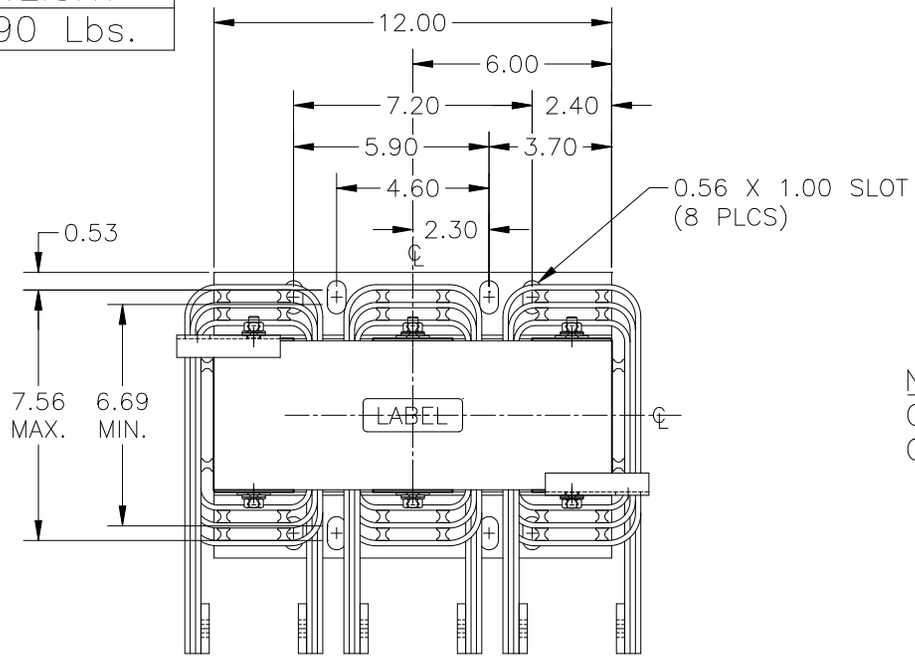

NOTE:
CENTER LINES REPRESENT CENTER OF REACTOR CORE

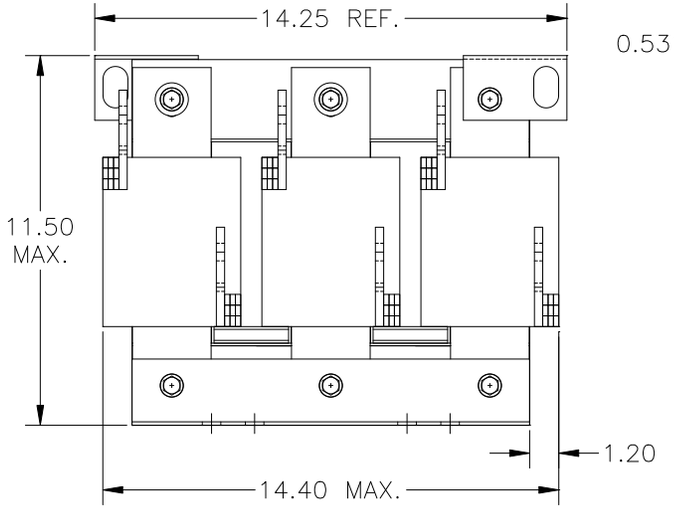

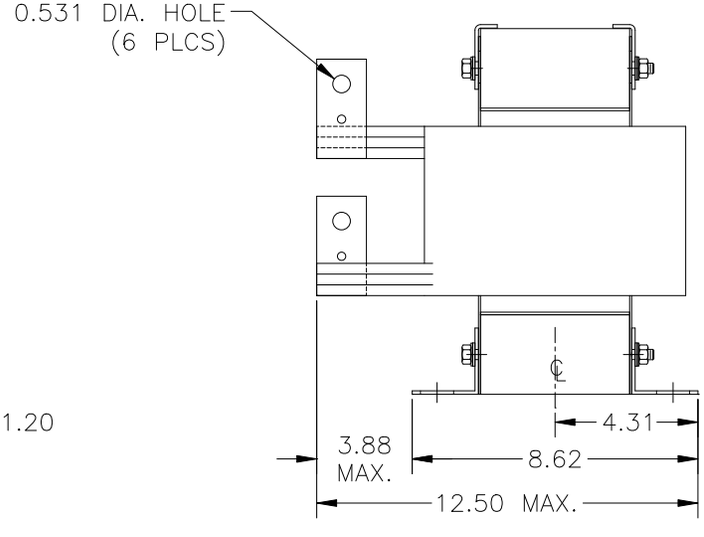

UNLESS OTHERWISE SPECIFIED, DIMENSIONS ARE IN INCHES AND TOLERANCES ARE:

DECI. FRAC.

ANGLES DRILLED HOLES

PART NAME: 3 PHASE REACTOR

DESCRIPTION: OUTLINE DIMENSION

FINISH:

MTE CORPORATION
MENOMONEE FALLS, WISCONSIN

RL-75002 REV. 17

SCALE NTS	DATE 9/28/05	C'K'D
REF.	DR. BY MDG	APP'D